

GC24018 Series

spare parts book

A. ARM BED AND ITS ACCESSORIES

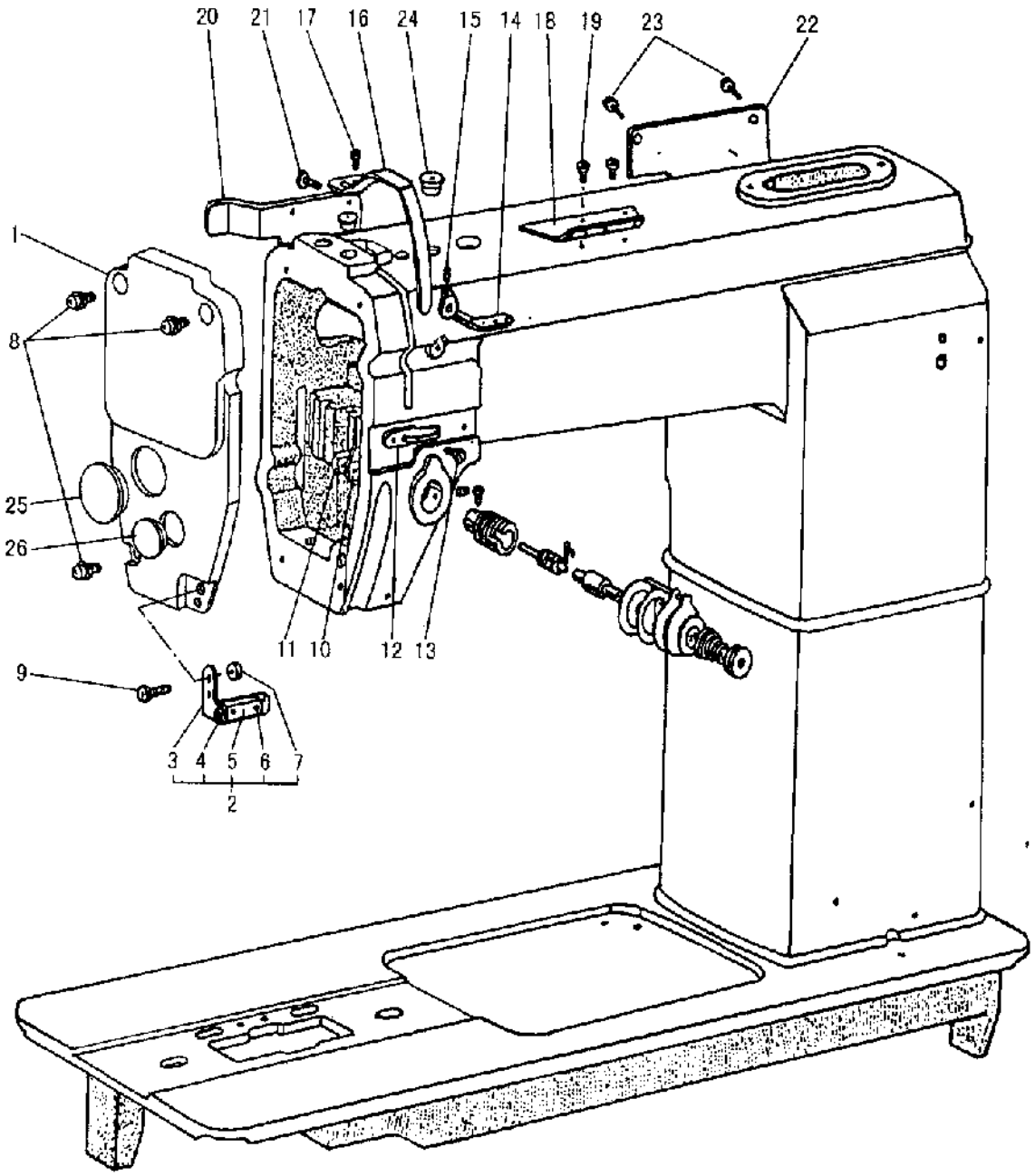

A.ARM BED AND ITS ACCESSORIES

Fig. No	Part No.	Description	GC24018	GC24018-1	Remarks
A01	H2400B2170	Face plate	1	1	
A02	H2407B0672	Thread guide (complete)	1	1	
A03	H2407B2021	Thread guide	1	1	
A04	H2407B2023	Felt	1	1	
A05	H2407B2022	Stopper	1	1	
A06	HA124B0713	Screw	2	2	SM3/32(56)×2.2
A07	HA7111N304	Nut	1	1	
A08	HA300B2160	Screw	3	3	SM11/64(40)×10
A09	HA300B2160	Screw	1	1	SM11/64(40)×10
A10	H2400B2050	Oil guard plate	1	1	
A11	H2400B2060	Spacer	1	1	
A12	H2400B2070	Thread guide	1	1	
A13	H2400B2080	Screw	2	2	SM3/16(28)×12.1
A14	HA100B2100	Thread guide	1		
A15	HA100B2110	Screw	1		SM11/64(40)×5.5
A16	H2400B2090	Thread take-up cover	1	1	
A17	HA300B2160	Screw	1	1	SM11/64(40)×10
A18	H2400B2100	Thread guide	1	1	
A19	HA700B2060	Screw	2	2	SM11/64(40)×8
A20	H2400B2110	Side cover	1	1	
A21	HA300B2170	Screw	2	2	SM11/64(40)×9
A22	H2415B0068	Arm side cover	1	1	
A23	HA300B2170	Screw	3	3	SM11/64(40)×9
A24	H2003M0067	Bushing cap	1	1	
A25	HA307B0673	Rubber plug	1	1	φ19
A26	HA307B0674	Rubber plug	1	1	φ11.8

B. THREAD TENSION REGULATOR MECHANISM

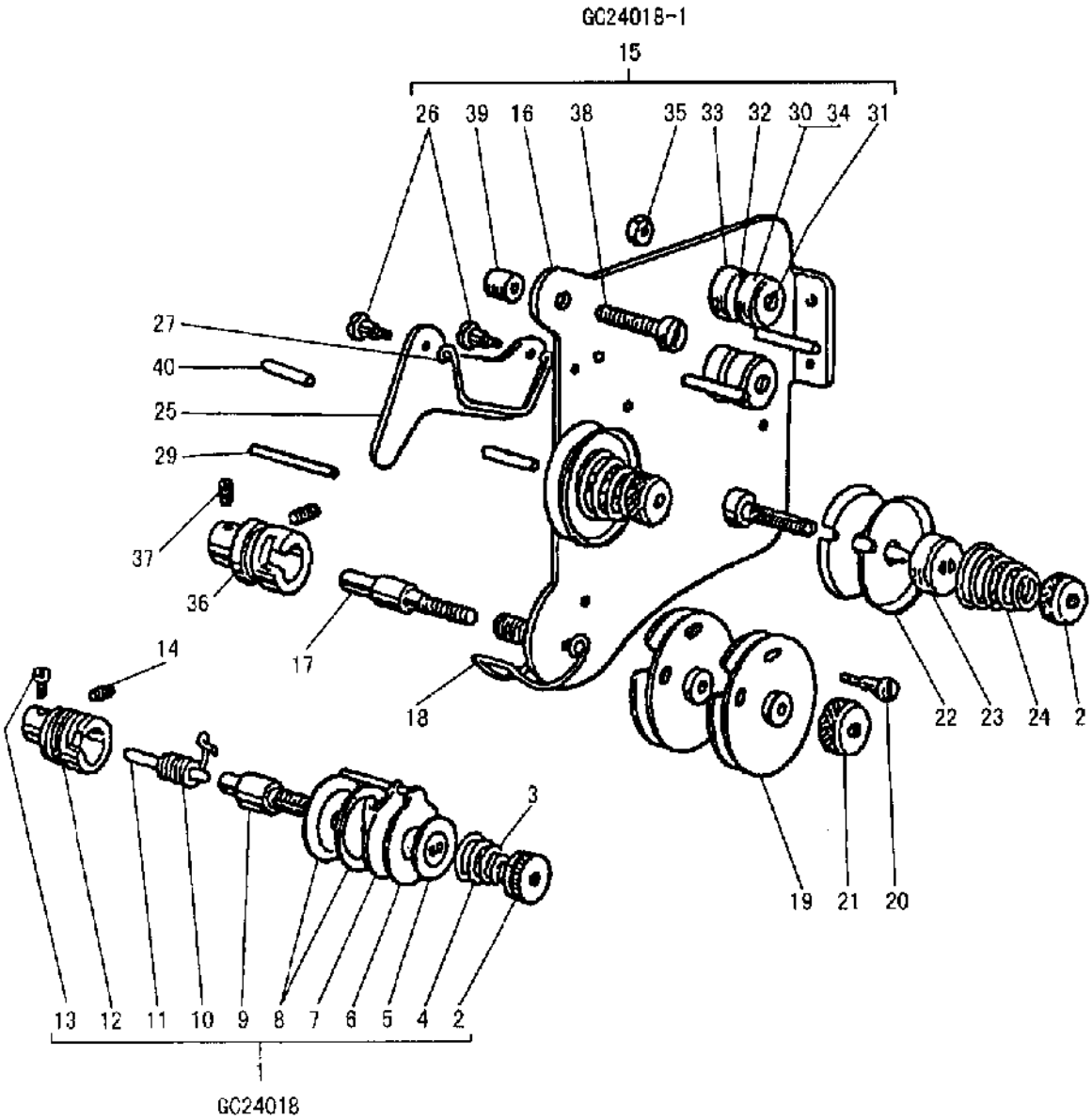

B.THREAD TENSION REGULATOR MECHANISM

Fig. No.	Part No.	Description	GC24018	GC24018-1	Remarks
B01	H2404C0065	Thread tension regulator (complete)	1		
B02	HA310B0701	Thumb nut (complete)	1	2	
B03	HA115B7010	Stop plate	1	2	
B04	HA607B0068	Thread tension spring	1		
B05	HA310B0702	Thread tension releasing disc	1		
B06	H2404C0652	Stop plate	1		
B07	H2404C0653	Tension regulator bracket	1		
B08	HA310B0705	Tension disc	2		
B09	H2404C0554	Thread tension stud	1		SM1/4(40)×48.5
B10	H2404C0655	Thread take-up spring	1		
B11	H2404C0656	Thread tension releasing pin	1		
B12	HA310B0703	Regulator bushing	1		
B13	HA115B0708	Screw	1	1	SM9/64(40)×4
B14	HA300B2080	Screw	1		SM15/64(28)×6.8
B15	H2504C0065	Thread tension regulator (complete)		1	
B16	H2504C0651	Mounting plate (complete)		1	
B17	H2504C0652	Thread tension stud		1	SM1/4(40)×47
B18	H2504C0653	Thread take-up spring		1	
B19	H2504C0654	Thread controller disc		2	
B20	H2504C0655	Screw		1	SM3/32(56)×11.5
B21	H2504C0658	Regulator thumb nut		1	
B22	H2504C0656	Tension disc		4	
B23	H2504C0657	Thread tension releasing disc		2	
B24	HA607B0068	Thread tension spring		2	
B25	H2504C0659	Tension releasing plate		1	
B26	H2504C6510	Screw		2	SM9/64(40)×6
B27	H2504C6511	Releasing spring		1	
B28	H2504C0121	Thread releasing pin		1	
B29	H2504C0122	Thread releasing pin		1	
B30	H2504C0131	Screw		2	
B31	H2504C0132	Pin		2	
B32	H2504C6514	Thread guide disc		2	
B33	H2504C6515	Guide blacket		2	
B34	H2504C6516	Tension spring		2	
B35	H2504C6517	Nut		2	SM9/64×40
B36	H2504C6518	Thread tension regulator		1	
B37	HA711B0681	Screw		1	SM9/64(40)×4.5
B38	HA7311C606	Screw		1	SM11/64(40)×15
B39	H2500C2020	Pipe		1	
B40	H2500C2030	Pin		1	

C. NEEDLE BAR AND TAKE-UP LEVER MECHANISM

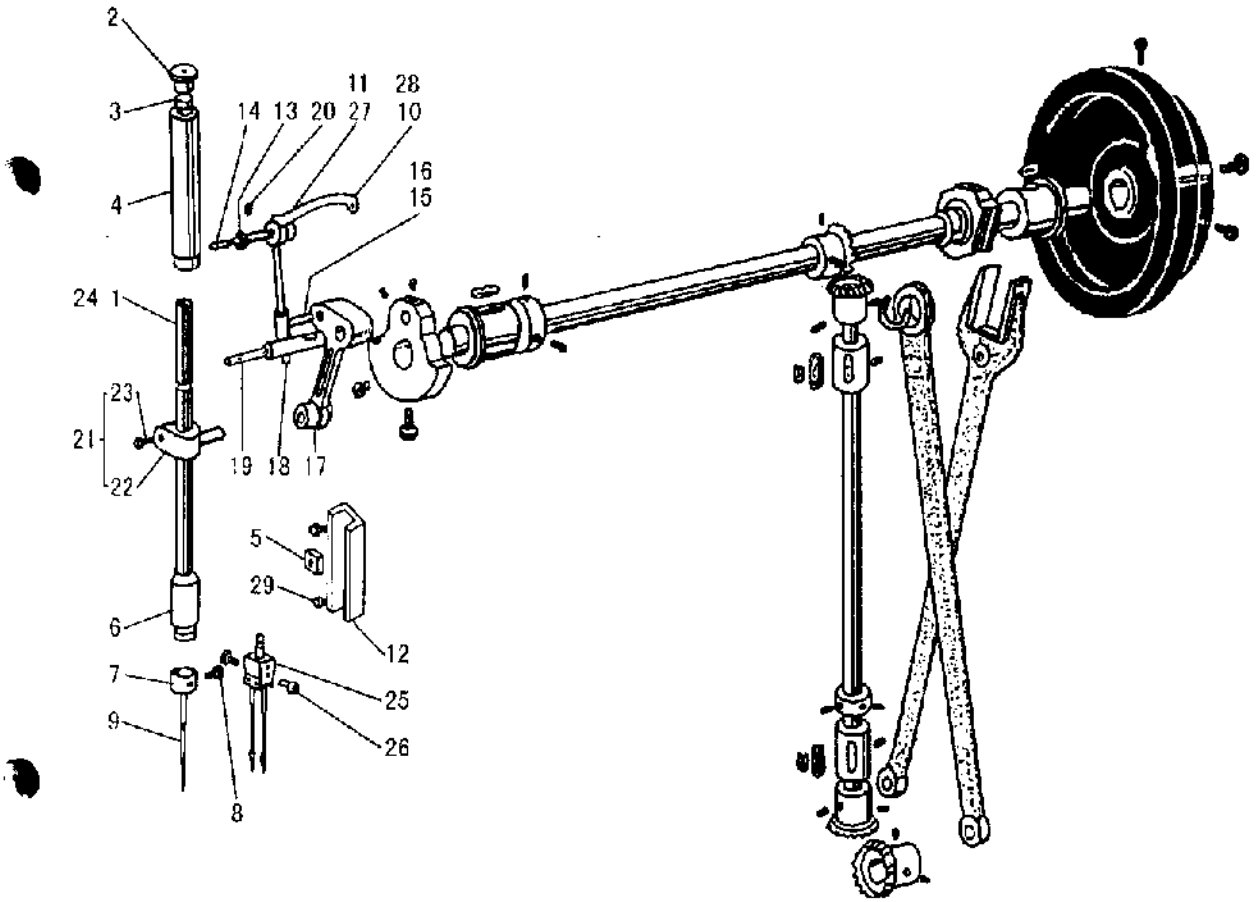

C.NEEDLE BAR AND TAKE-UP LEVER MECHANISM

Fig. No.	Part No.	Description	GC24018	GC24018-1	Remarks
C01	H2404D0651	Needle bar	1		
C02	H2003M0067	Plug	1	1	
C03	HA100C2100	Felt	1	1	
C04	H2009B0067	Needle bar bushing (upper)	1	1	
C05	HA100C2200	Square block	1	1	
C06	HA300C2060	Needle bar bushing (under)	1	1	
C07	HA500C2030	Thread guide	1		
C08	HA100C2170	Screw	1		SM1/8(44)×4.5
C09	H2404D0653	Needle	1	2	DP×5 16#
C10	H2405D1011	Take-up lever (complete)	1		
C11	H24211D105	lever and side block (complete)	1		
C12	HA100C2180	Needle bar connecting link guide	1	1	
C13	H2405D1121	Take-up lever support stud	1	1	
C14	H2405D1122	Oil wick	1	1	
C15	H24211D305	Plug	1	1	
C16	H24211D405	Oil wick	1	1	
C17	H2405D1012	Needle bar link	1	1	
C18	H2405D0662	Crank pin	1	1	
C19	H2405D0663	Oil wick	1	1	
C20	H2405D0664	Screw	1	1	SM15/64(28)×14
C21	H2405D0665	Needle bar connecting stud (complete)	1	1	
C22	HA104C0658	Needle bar connecting stud (complete)	1	1	
C23	H2204C0651	Screw	1	1	SM9/64(40)×6.5
C24	H2504D0651	Needle bar		1	
C25	H2504D0021	Needle clamp		1	(3/32)
C25	H2504D0022	Needle clamp		1	(1/8)
C25	H2504D0023	Needle clamp		1	(5/32)
C25	H2504D0024	Needle clamp		1	(3/64)(1/16)
C25	H2500D2030	Needle clamp		1	(3/8)
C26	H2504D0653	Screw		2	SM1/8(44)×5.3
C26	HA115B0708	Screw		2	SM9/64(40)×6
C26	H2404G0657	Screw		2	SM9/64(40)×6.5
C27	H25211D105	lever and side block (complete)		1	
C28	H2505D1011	Take-up lever (complete)		1	
C29	HA100C2190	Screw	2	2	SM11/64(40)×8

D. UPPER SHAFT AND VERTICAL SHAFT MECHANISM

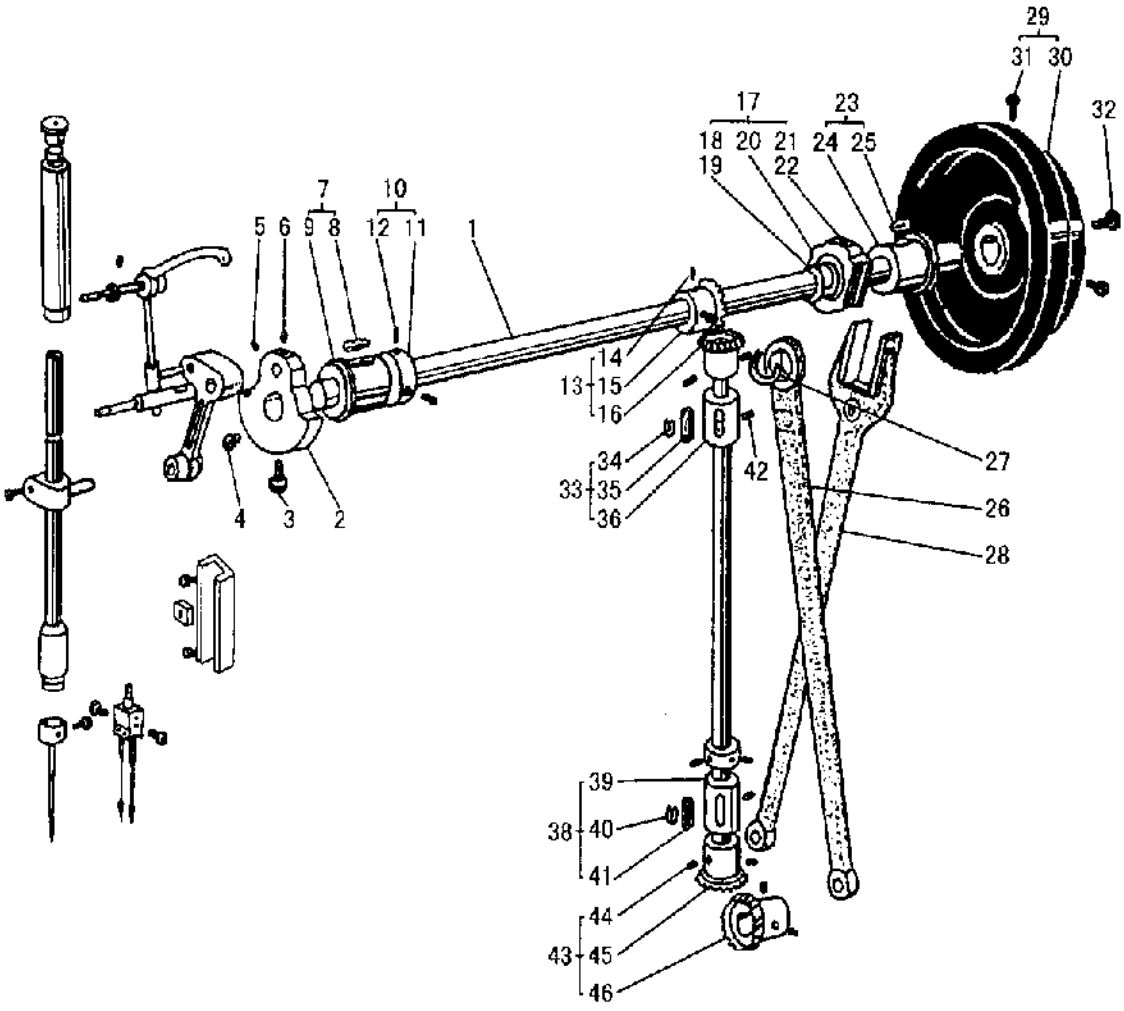

D.UPPER SHAFT AND VERTICAL SHAFT MECHANISM

Fig. No.	Part No.	Description	GC24018	GC24018-1	Remarks
D01	H2404E0651	Upper shaft	1	1	
D02	H2404E0021	Crank	1	1	
D03	HA307C0662	Screw	1	1	
D04	HA108C0663	Screw	1	1	
D05	HA100C2070	Screw	1	1	SM9/32(28)×10
D06	HA100C2060	Screw	1	1	SM9/32(28)×13
D07	H2404E0653	Upper shaft bushing (left) (complete)	1	1	
D08	H2009B0742	Felt	1	1	
D08	H2009B0743	Felt	1	1	
D09	H2404E0031	Upper shaft bushing (left)	1	1	
D10	HA108G0066	Upper shaft collar (complete)	1	1	
D11	HA108G0661	Upper shaft collar	1	1	
D12	HA105D0662	Screw	2	2	SM1/4(40)×4
D13	HA113D4021	Bevel geal (upper) (complete)	1	1	
D14	HA108C0663	Screw	4	4	SM1/4(40)×7
D15	HA113D2112	Bevel geal (upper shaft)	1	1	
D16	HA113D2122	Bevel geal (vertical shaft)	1	1	
D17	H2404E0041	Feed cam (complete)	1	1	
D18	H24141E104	Feed cam	1	1	
D19	HA3411D308	Screw	2	2	SM15/64(28)×7
D20	HA3411D208	Feed cam ring	1	1	
D21	H20111C206	Felt	1	1	
D22	H20111C106	Spring	1	1	
D23	H2009B0073	Upper shaft bushing (right) (complete)	1	1	
D24	H2009B0732	Upper shaft bushing (right)	1	1	
D25	H2009B0731	Felt	1	1	
D26	H24142E104	Crank rod	1	1	
D27	HA112D3012	C-type stopper	1	1	
D28	H2404E0655	Feed forked conection	1	1	
D29	H2404E0656	Pulley (complete)	1	1	
D30	H2404E0061	Pulley	1	1	
D31	HA110D0672	Screw	2	2	SM15/64(28)×12
D32	HA100D2080	Screw	1	1	SM11/32(28)×10
D33	H2009B0071	Vertical shaft bushing upper (complete)	1	1	
D34	H2009B0712	Felt	1	1	
D35	H2009B0711	Felt	1	1	
D36	H2009B0713	Vertical shaft bushing upper	1	1	
D37	H2405E1011	Vertical shaft bushing	1	1	
D38	H2009B0072	Vertical shaft bushing under (complete)	1	1	
D39	H2009B0721	Vertical shaft bushing under	1	1	
D40	H2009B0712	Felt	1	1	
D41	H2009B0711	Felt	1	1	
D42	HA100C2020	Screw	2	2	SM15/64(28)×14

D.UPPER SHAFT AND VERTICAL SHAFT MECHANISM

Fig. No.	Part No.	Description	GC24018	GC24018-1	Remarks
D43	HA113D4022	Bevel geal (under) (complete)	1	1	
D44	HA108C0663	Screw	4	4	SM1/4(40)×7
D45	HA113D2222	Bevel geal (under) (vertical shaft)	1	1	
D46	HA113D2212	Bevel geal (under) (lewer shaft)	1	1	

E. STITCH REGULATOR MECHANISM

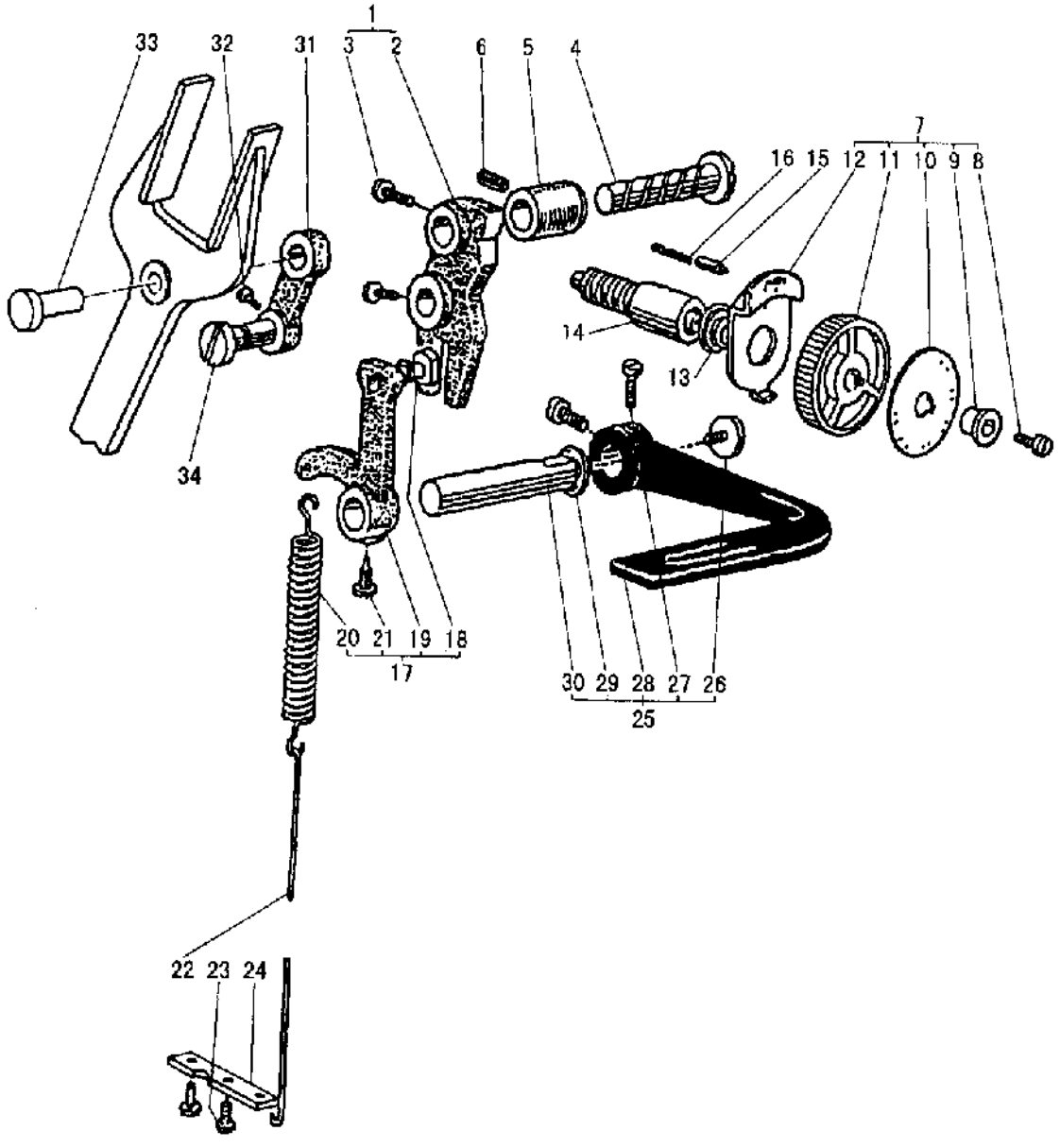

E.STITCH REGULATOR MECHANISM

Fig. No.	Part No.	Description	GC24018	GC24018-1	Remarks
E01	H2404F0065	Feed regulator (complete)	1	1	
E02	H2404F0651	Feed regulator	1	1	
E03	HA104F0654	Screw	2	2	SM15/64(28)×10
E04	HA100F2040	Shaft	1	1	
E05	H2400F2020	Bushing	1	1	
E06	HA100C2020	Screw	1	1	SM15/6(28)×14
E07	H2400F2030	Feed screw (complete)	1	1	
E08	HA720F0686	Screw	1	1	SM3/16(28)×18
E09	HA720F0685	Bushing	1	1	
E10	HA720F0684	Stitch length indiating plate	1	1	
E11	HA7421F120	Dial	1	1	
E12	HA720F0683	Stopper pin release lever	1	1	
E13	HA720F0687	Coil spring	1	1	
E14	HA720F0681	Screw bar	1	1	
E15	HA700F2030	Pin	1	1	
E16	HA100F2090	Spring	1	1	
E17	H2004F0067	Feed regulating arm (complete)	1	1	
E18	HA115F4011	Square block (complete)	1	1	
E19	HA115F0691	Feed regulating arm	1	1	
E20	H2004F0671	Spring	1	1	
E21	HA100F2130	Screw	1	1	SM15/64(28)×6.7
E22	H2400F2040	Knee lifter rod	1	1	
E23	HA100C2190	Screw	2	2	SM11/64(40)×8
E24	H2400F2050	Bracket	1	1	
E25	H2000F2020	Reverse lever(complete)	1	1	
E26	HA113F0683	Screw	1	1	SM3/16(28)×6.5
E27	HA104F0654	Screw	2	2	SM15/64(28)×10
E28	HA309F0671	Reverse lever	1	1	
E29	HA100F2110	Spring washer	1	1	
E30	H2005F0065	Shaft	1	1	
E31	HA104F0652	Feed conection link	1	1	
E32	HA104F0654	Screw	1	1	SM15/64(28)×10
E33	HA104F0651	Shaft	1	1	
E34	HA104F0653	Shaft	1	1	

F. PRESSER FOOT AND KNEE LIFTER MECHANISM

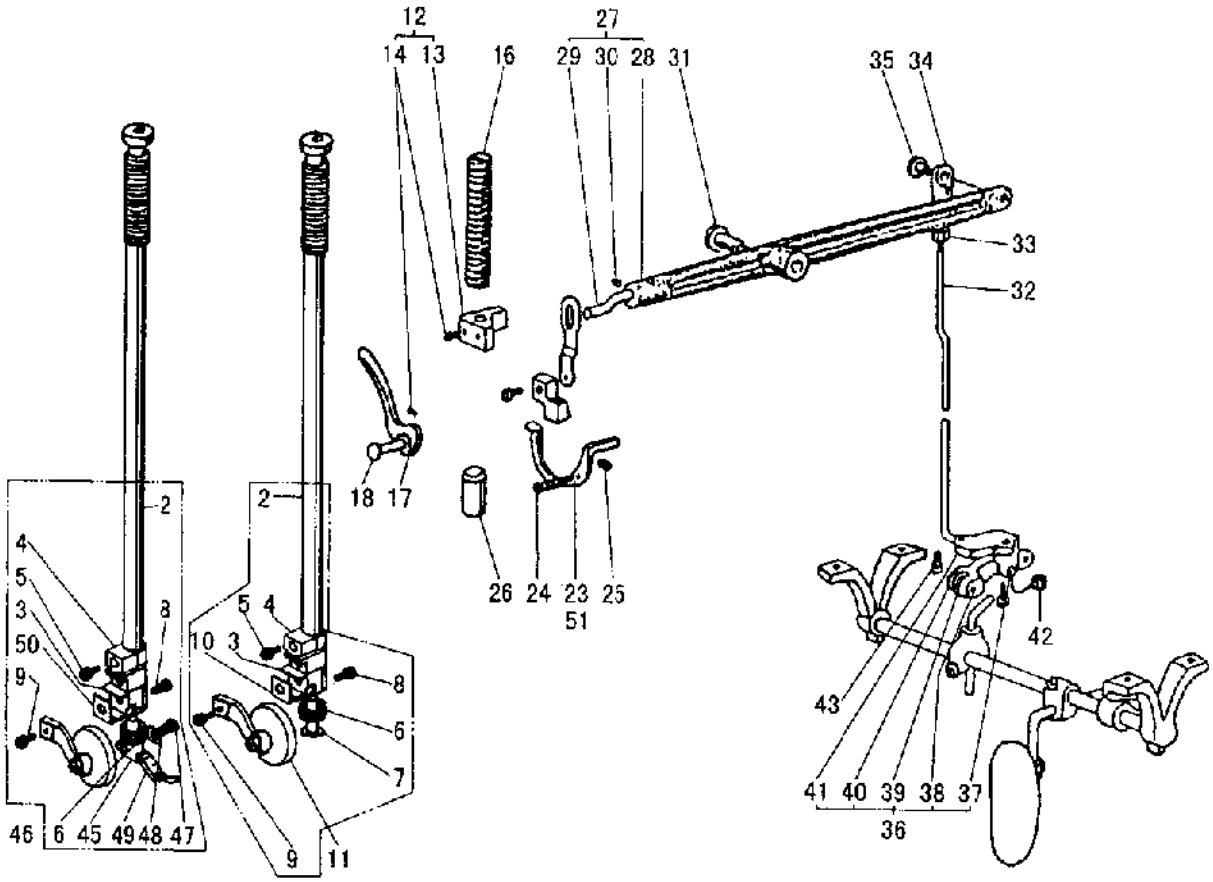

F. PRESSER FOOT AND KNEE LIFTER MECHANISM

Fig. No.	Part No.	Description	GC24018	GC24018-1	Remarks
F01	H2404G0065	Roller Presser bar (complete)	1		
F02	H2404G0651	Presser bar	1	1	
F03	H2404G0652	Bracket	1	1	
F04	H2404G0653	Stopper	1	1	
F05	H2404G0654	Screw	1	1	SM15/64(28)×8
F06	H2404G0655	Spring	1	1	
F07	H2404G0656	Spring stud	1		
F08	H2404G0657	Screw	2	2	SM9/64(40)×3.5
F09	H2404G0658	Screw	1	1	SM11/64(32)×7.7
F10	H2404G0659	Spacer	1		
F11	H2405G0066	Roller Presser (complete)	1		
F12	H2406G0067	Presser bar holder (complete)	1	1	
F13	H2406G0671	Presser bar holder	1	1	
F14	HA3411D308	Screw	2	2	SM15/64(28)×7
F15	H2400G2040	Presser releasing thumb screw	1	1	SM1/2(28)×33
F16	H2400G2050	Presser spring	1	1	
F17	H2000I2060	Presser bar lefter	1	1	
F18	H2000I2070	Presser bar lefter pin	1	1	
F19	H2409G0068	Knee lifter lever link (complete)	1	1	
F20	H2409G0682	Knee lifter lever link	1	1	
F21	H2409G0681	Knee lifter lever	1	1	
F22	H2409G0683	Screw	1	1	SM3/16(32)×6
F23	H2400G2070	Tension releasing lever	1		
F24	H2400G2080	Screw	1	1	SM11/64(40)×23.5
F25	H2400G2090	Coil spring	1	1	
F26	HA3001I2090	Presser bar bushing	1	1	
F27	H2413G0069	Knee lifter lever (complete)	1	1	
F28	H2413G0691	Knee lifter lever	1	1	
F29	H2413G0692	Pin	1	1	
F30	HA3411D308	Screw	1	1	SM15/64(28)×7
F31	H2000I2130	Screw	1	1	SM15/64(24)×11
F32	H2414G0701	Knee lifter lever connection rod	1	1	
F33	H2000I2160	Nut	1	1	
F34	H2000I2150	Knee lifter lever joint	1	1	
F35	H2000I2140	Screw	1	1	SM15/64(28)×5.8
F36	H2415G0071	Presser bar lever	1	1	
F37	H6050S0180	Pin	1	1	GB/T119.2 5×18
F38	H6090S0220	Spring pin	1	1	GB/T879.1 6×22
F39	H2415G0712	Roller	1	1	
F40	H2415G0711	Knee lifter lever joint	1	1	
F41	H2021I0065	Bracket	1	1	
F42	H2400G2130	Spring	1	1	
F43	H2000I2200	Screw	2	2	SM11/64(40)×12

F. PRESSER FOOT AND KNEE LIFTER MECHANISM

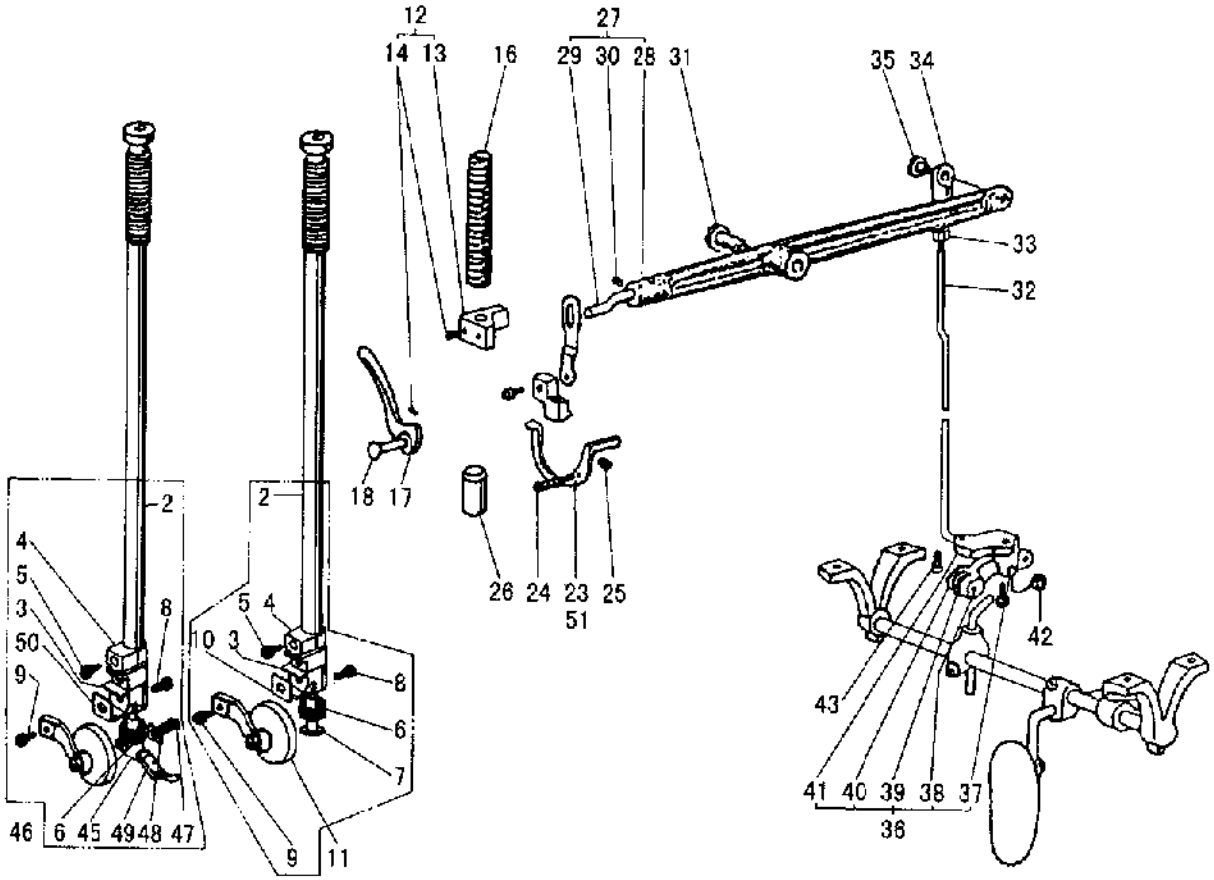

F. PRESSER FOOT AND KNEE LIFTER MECHANISM

Fig. No.	Part No.	Description	GC24018	GC24018-1	Remarks
F01	H2404G0065	Roller Presser bar (complete)	1		
F02	H2404G0651	Presser bar	1	1	
F03	H2404G0652	Bracket	1	1	
F04	H2404G0653	Stopper	1	1	
F05	H2404G0654	Screw	1	1	SM15/64(28)×8
F06	H2404G0655	Spring	1	1	
F07	H2404G0656	Spring stud	1		
F08	H2404G0657	Screw	2	2	SM9/64(40)×3.5
F09	H2404G0658	Screw	1	1	SM11/64(32)×7.7
F10	H2404G0659	Spacer	1		
F11	H2405G0066	Roller Presser (complete)	1		
F12	H2406G0067	Presser bar holder (complete)	1	1	
F13	H2406G0671	Presser bar holder	1	1	
F14	HA3411D308	Screw	2	2	SM15/64(28)×7
F15	H2400G2040	Presser releasing thumb screw	1	1	SM1/2(28)×33
F16	H2400G2050	Presser spring	1	1	
F17	H2000I2060	Presser bar lefter	1	1	
F18	H2000I2070	Presser bar lefter pin	1	1	
F19	H2409G0068	Knee lifter lever link (complete)	1	1	
F20	H2409G0682	Knee lifter lever link	1	1	
F21	H2409G0681	Knee lifter lever	1	1	
F22	H2409G0683	Screw	1	1	SM3/16(32)×6
F23	H2400G2070	Tension releasing lever	1		
F24	H2400G2080	Screw	1	1	SM11/64(40)×23.5
F25	H2400G2090	Coil spring	1	1	
F26	HA3001I2090	Presser bar bushing	1	1	
F27	H2413G0069	Knee lifter lever (complete)	1	1	
F28	H2413G0691	Knee lifter lever	1	1	
F29	H2413G0692	Pin	1	1	
F30	HA3411D308	Screw	1	1	SM15/64(28)×7
F31	H2000I2130	Screw	1	1	SM15/64(24)×11
F32	H2414G0701	Knee lifter lever connection rod	1	1	
F33	H2000I2160	Nut	1	1	
F34	H2000I2150	Knee lifter lever joint	1	1	
F35	H2000I2140	Screw	1	1	SM15/64(28)×5.8
F36	H2415G0071	Presser bar lever	1	1	
F37	H605050180	Pin	1	1	GB/T119.2 5×18
F38	H609060220	Spring pin	1	1	GB/T879.1 6×22
F39	H2415G0712	Roller	1	1	
F40	H2415G0713	Knee lifter lever joint	1	1	
F41	H2021I0065	Bracket	1	1	
F42	H2400G2130	Spring	1	1	
F43	H2000I2200	Screw	2	2	SM11/64(40)×12

F.PRESSER FOOT AND KNEE LIFTER MECHANISM

Fig. No.	Part No.	Description	GC24018	GC24018-1	Remarks
F44	H2504G0651	Roller Presser bar (complete)		1	(3/32)
F45	H2504G0011	Spring stud		1	
F46	H2504G0012	Roller Presser (complete)		1	
F47	H2504G0013	Screw		1	SM11/64(32)×7
F48	H2504G0014	Spacer		1	
F49	H2504G0021	Presser foot		1	(3/32)
F49	H2504G0022	Presser foot		1	(1/8)
F49	H2504G0023	Presser foot		1	(5/32)
F49	H2504G0024	Presser foot		1	(1/16)(3/64)
F50	H2504G0041	Spacer		1	(3/32)(1/8)(5/32)
F50	H2504G0042	Spacer		1	(3/64)(1/8)
F50	H2404G0659	Spacer		1	(1/16)(5/32)
F51	H2500G2020	Tension releasing lever		1	

G. LOWER SHAFT AND FEED ROCK SHAFT MECHANISM

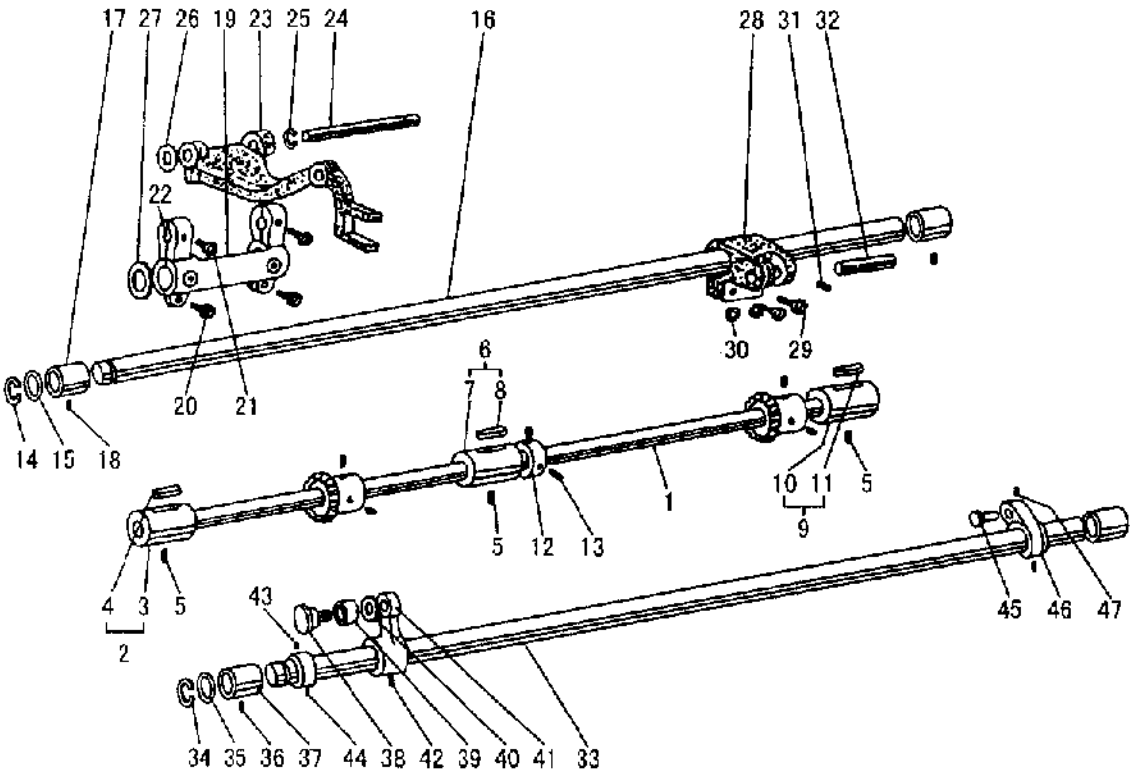

G.LOWER SHAFT AND FEED ROCK SHAFT MECHANISM

Fig. No.	Part No.	Description	GC24018	GC24018-1	Remarks
G01	H2404H0651	Lower shaft	1	1	
G02	H2009B0072	Lower shaft bushing left (complete)	1	1	
G03	H2009B0721	Lower shaft bushing left	1	1	
G04	H2009B0711	Felt	1	1	
G04	H2009B0712	Oil wick	1	1	
G05	HA3411D308	Screw	3	3	SM15/64(28)×7
G06	H2009B0075	Lower shaft bushing middle (complete)	1	1	
G07	H2009B0751	Lower shaft bushing middle	1	1	
G08	H2009B0711	Felt	1	1	
G09	H2406H0067	Lower shaft bushing right (complete)	1	1	
G10	H2406H0671	Lower shaft bushing right	1	1	
G11	H2009B0711	Felt	1	1	
G12	HA305E0661	Coller	1	1	
G13	HA305E0662	Screw	2	2	SM15/64(28)×4.5
G14	H007009150	C-type stopper	1	1	GB/T894.1 15
G15	HA100G2130	Washer	1	1	
G16	H2405H1011	Feed rock shaft	1	1	
G17	H2009B0069	Feed rock shaft bushing(left)	2	2	
G18	HA100C2020	Screw	2	2	SM15/64(28)×14
G19	H24241H105	Feed rock shaft crank	1	1	
G20	HA111G0683	Screw	2	2	SM11/64(40)×12
G21	HA100C2190	Screw	2	2	SM11/64(40)×8
G22	H609015060	Spring pin	1	1	GB/T879.1 1.5×6
G23	H24242H205	Feed bar	1	1	
G24	H2405H1043	Feed bar shaft	1	1	
G25	H007013050	E-type stopper	1	1	GB/T896.5
G26	H2405H1044	Washer	1	1	
G27	H2405H0665	Slide Washer	1	1	
G28	H24221H105	Feed rock shaft (right)	1	1	
G29	HA111G0683	Screw	2	2	SM11/64(40)×12
G30	H24221H205	Washer	2	2	
G31	HA100B2110	Screw	1	1	SM11/64(40)×5.5
G32	H2405H0663	Pin	1	1	
G33	H2405H0666	Feed lifting rock shaft	1	1	
G34	H007009150	C-type stopper	1	1	GB/T894.1 15
G35	HA100G2130	Washer	1	1	
G36	HA100C2020	Screw	2	2	SM15/64(28)×14
G37	H2009B0069	Feed lifting rock shaft bushing	2	2	
G38	HA305G1012	Shaft	1	1	
G39	HA310G3011	Square block	1	1	
G40	HA310G3012	Washer	1	1	
G41	HA305G1011	Feed lifting crank left	1	1	
G42	HA731C0606	Screw	1	1	SM11/64(40)×15

G.LOWER SHAFT AND FEED ROCK SHAFT MECHANISM

Fig. No.	Part No.	Description	GC24018	GC24018-1	Remarks
G43	HA108G0661	Collor	1	1	
G44	HA105D0662	Screw	2	2	SM1/4(40)×4
G45	HA100G2070	Shaft	1	1	
G46	H2410H1071	Feed lifting crank right	1	1	
G47	HA104G0012	Screw	2	2	SM3/16(28)×12

H. HOOK SADDLE MECHANISM

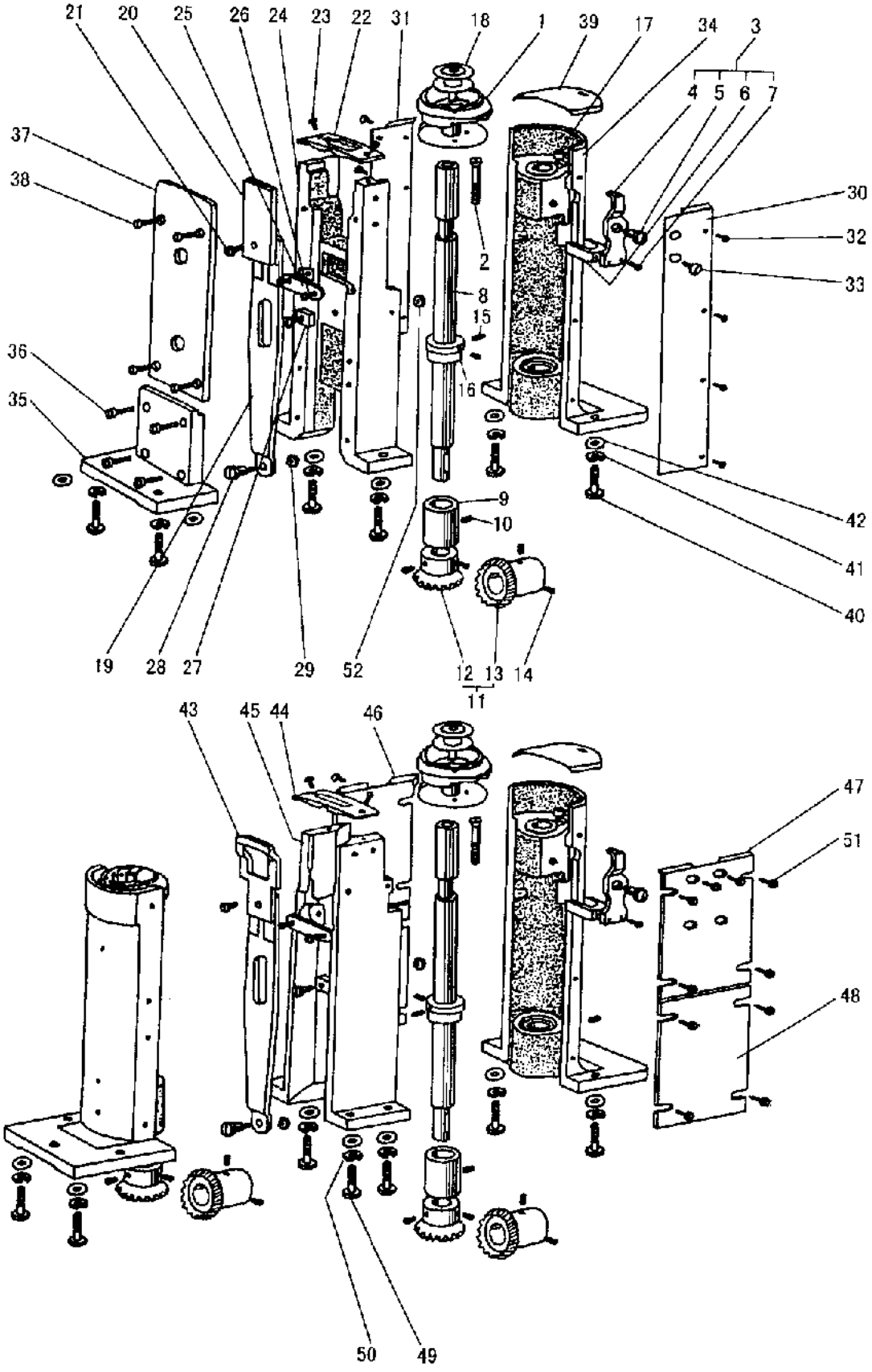

H.HOOK SADDLE MECHANISM

Fig. No.	Part No.	Description	GC24018	GC24018-1	Remarks
H01	H2404I0651	Hook complete	1	2	
H02	H2404I0652	Screw	1	2	SM9/64(40)×27
H03	H2404I0653	Opener(comeplete)	1	2	
H04	I1240410031	Opener	1	2	
H05	H2404I0032	Screw	1	2	SM9/32(28)×5.5
H06	H2404I0033	Opener bracket	1	2	
H07	H2404I0034	Screw	1	2	SM9/64(40)×8.5
H08	H2404I0655	Hook shaft	1	2	
H09	H2404I0656	Hook shaft bushing	1	2	
H10	HA100B2110	Screw	1	2	SM11/64(40)×5.5
H11	H2404I0657	Bevel gear(comeplete)	1	2	
H12	H2404I0071	Bevel gear (hook shaft)	1	2	
H13	H2404I0072	Bevel gear (lower shaft)	1	2	
H14	HA105D0662	Screw	4	8	SM1/4(40)×4
H15	HA105D0662	Screw	2	4	SM1/4(40)×4
H16	H2404I0081	Coller	1	2	
H17	H2404I0659	Felt	1	2	
H18	H2400I2020	Bobbin	1	2	
H19	H2406I0661	Feed plate	1	1	
H20	H2406I0662	Feed dog	1		
H21	HA300B2130	Screw	1	1	SM11/64(40)×5.5
H22	H2406I0663	Needle plate	1		
H23	H2406I0664	Screw	2	2	SM9/64(40)×7.5
H24	H2406I0665	Feed plate set bracket	1		
H25	H2406I0666	Supporter plate	1	1	
H26	HA300B2190	Screw	2	2	SM11/64(40)×6.5
H27	H2406I0667	Square block(comeplete)	1	1	
H28	H2400I2040	Screw	1	1	SM11/64(40)×6.5
H29	H2000M0120	Nut	1	1	
H30	H2400I2050	Cover plate	1		
H31	H2400I2060	Cover plate	1		
H32	H2400I2070	Screw	8		SM9/64(40)×6
H33	H2400I2080	Screw	3	4	SM11/64(4.37)×40×4
H34	H2404I0654	Hook shaft supporter	1	2	
H35	H2400I2090	Side cover bracket	1		
H36	HA111G0683	Screw	4		SM11/64(40)×12
H37	H2400I2100	Rear cover plate	1		
H38	HA100C2190	Screw	4		SM11/64(40)×8
H39	H2400I2110	Slide plate	1	2	
H40	H2400I2120	Screw	6	6	SM5/16(24)×26
H41	H0050080S0	Spring washer	6	8	GB/T93 8
H42	H0050040S0	Washer	6	6	GB/T848 8
H43	H2504I0011	Feed dog		1	(3/32)(1/16)(3/64)

H.HOOK SADDLE MECHANISM

Fig. No.	Part No.	Description	GC24018	GC24018-1	Remarks
H43	H2504I0012	Feed dog		1	(1/8) (5/32)
H44	H2504I0021	Needle plate		1	(3/32)
H44	H2504I0022	Needle plate		1	(1/8)
H44	H2504I0023	Needle plate		1	(5/32)
H44	H2504I0024	Needle plate		1	(1/16)
H44	H2504I0025	Needle plate		1	(3/64)
H45	H2504I0653	Feed plate set bracket		1	
H46	H2500I2020	Cover plate		1	
H47	H2500I2030	Cover plate		1	
H48	H2500I2040	Cover plate		2	
H49	H2500I2050	Screw		2	SM1/4(24)×16.5
H50	H005004080	Washer		2	GB/T848 8
H51	HA7311CH06	Screw		16	SM9/64(40)×8
H52	H2000I2160	Nut	1	1	

I. OIL LUBRICATION MECHANISM

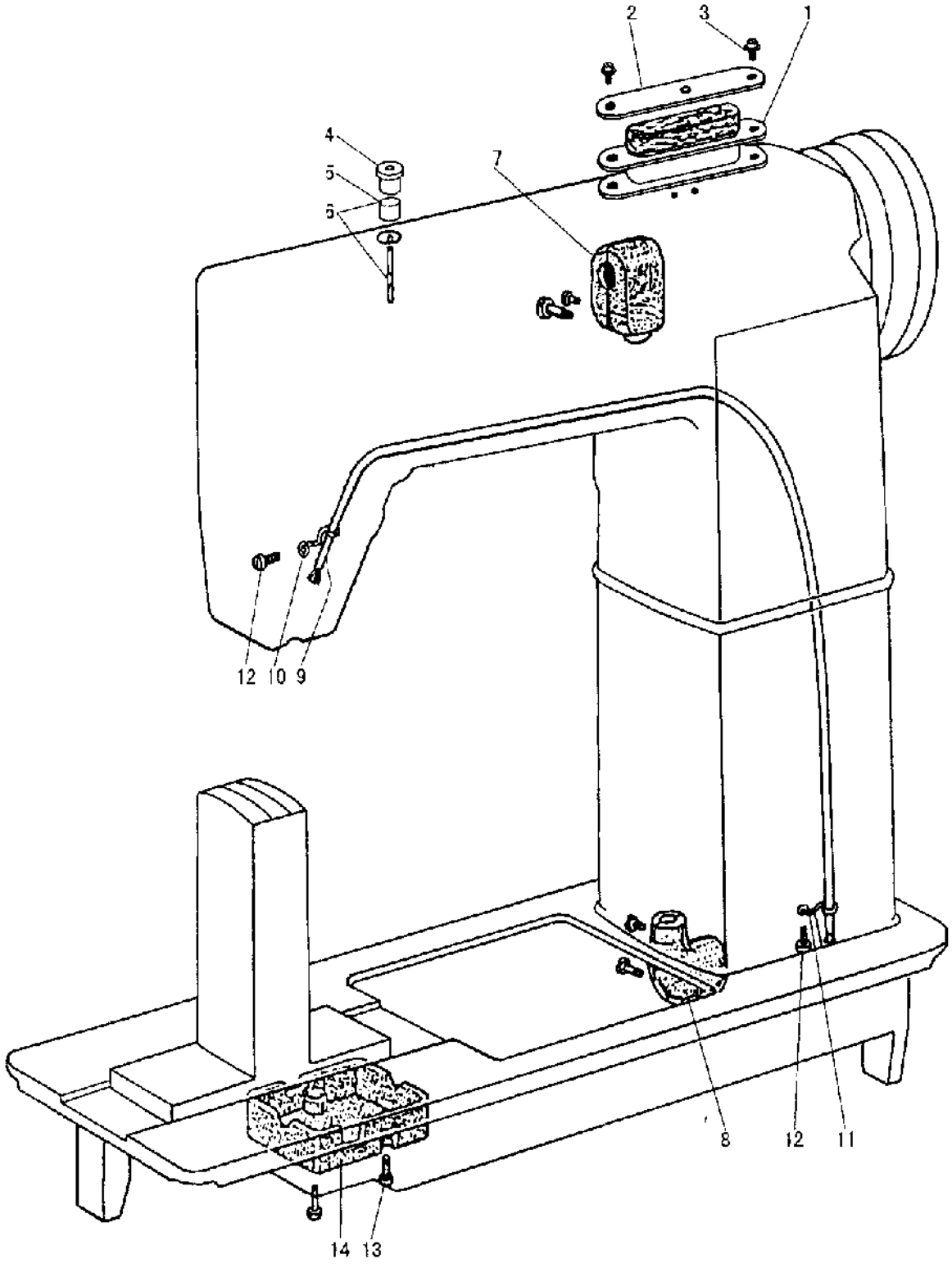

I.OIL LUBRICATION MECHANISM

Fig. No	Part No.	Description	GC24018	GC24018-1	Remarks
I01	H2000M0170	Oil box (complete)	1		
I02	H2020M0065	Oil cover	1		
I03	HA300B2170	Screw	2		SM11/64(40)×9
I04	H2400J2010	Oil cap	1		
I05	H2400J2020	Felt	1		
I06	H2400J2030	Oil wick	1		
I07	H2407J0065	Gear box upper (complete)	1		
I08	H2408J0066	Gear box lower (complete)	1		
I09	H2410J0067	Pipe (complete)	1		
I10	H2400J2090	Holder	1		
I11	H2400J2080	Holder	1		
I12	HA100C2190	Screw	2		SM11/64(40)×8
I13	HA7311C606	Screw	2		SM11/64(40)×15
I14	H2400J2060	Gear box	1		

J. ACCESSORIES

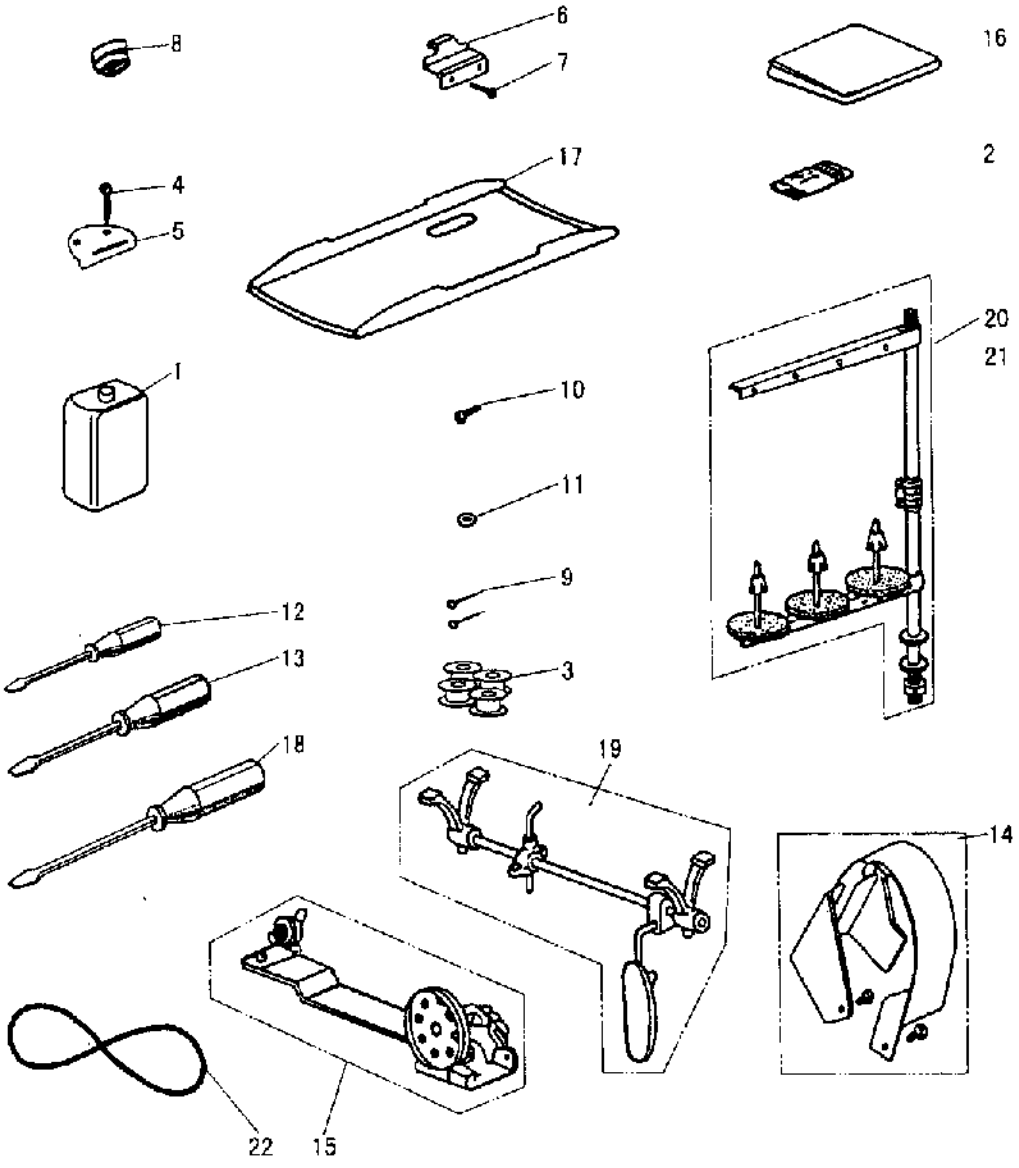

J.ACCESSORIES

Fig. No.	Part No.	Description	GC24018	GC24018-1	Remarks
J01	H2004O0069	Oiler	1	1	P831001X02
J02	H2404D0653	Needle	4	6	DP×5-16
J03	H2400I2020	Bobbin	3	4	
J04	H802060250	Screw	4	4	GB/T100 6×25
J05	H2404K0654	Hinge(1)	2	2	
J06	H2404K0655	Hinge(2)	2	2	
J07	H2404K0656	Screw	4	4	SM15/64(28)×9
J08	H2404K0657	Vibration preventing rubbers	4	4	
J09	HZB1020250	Nail	10	10	YB/T5002 2×25
J10	H801045200	Screw	2	2	GB/T99 4.5×20
J11	HA300J2230	Washer	2	2	
J12	HA300J2210	Screw driver(small)	1	1	
J13	HA300J2200	Screw driver(middle)	1	1	
J14	H2405K0066	Belt cover (complete)	1	1	
J15	HA109J0068	Bobbin winder (complete)	1	1	
J16	HA100J2180	Vinyl cover	1	1	
J17	H2400K0050	Oil reservoir	1	1	
J18	HA300J2070	Screw driver(large)	1	1	
J19	H2400K0070	Knee lifter (complete)	1	1	
J20	HA200J2030	Cotton stand	1		GC24018
J21	H3200L0120	Cotton stand		1	GC24018-1
J22	H2400K0080	Belt	1	1	M55 (1397mm)